**Acme Sanitary Ware Co. Ltd.**
1/F, Acme Building, 22-28 Nanking Street, Kowloon, Hong Kong
Tel: 2388 7171 Fax: 2710 8012
Email: acme@acmesanitary.com.hk
Website: www.acmesanitary.com.hk
Since 1949

GROHE Pure Freude an Wasser

| PROJECT | | REF | | REV | ITEM CODE | |
|---|---|---|---|---|---|---|
| LOCATION | | DATE | | | PAGE | |

# SANITARY WARE SPECIFICATION SHEET

| | |
|---|---|
| Item Descriptions | GROHE (Germany) "BauFlow" Deck-mounted single-lever basin mixer S-Size with Pop-up waste set |
| Dimensions | L89 x W45 x H144 mm |
| Model | 23751000 |
| Finish / Material | Chrome |
| Country of origin | Germany |
| Manufacturer | GROHE Limited |
| Supplier | Acme Sanitary Ware Co. Ltd<br>Mr. Eric Wong/ Mr. Wilson Hung |
| Contact Tel/Fax | (852) 2388-7171 / (852) 2710-8012 |
| E-mail | acme@acmesanitary.com.hk |
| Website | www.acmesanitary.com.hk |

Illustration/ Drawing



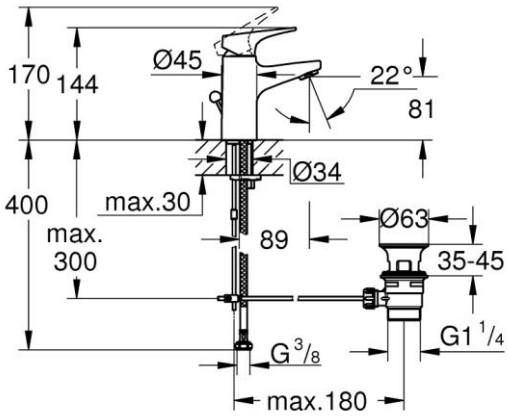


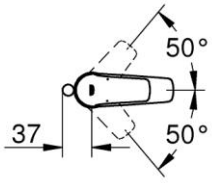


**Key Features**

- GROHE SmoothControl 28 mm ceramic cartridge
- GROHE LongLife finish
- AquaCalibrator
- maximum flow rate (at 3 bar): 5 l/min
- rapid installation system
- plastic pop-up waste set 1 1/4"
- flexible connection hoses

Note:

** All information of the above is for the reference only. No prior notice is made if any changes.*

水 務 署
Water Supplies Department

總部 Headquarters
香港灣仔告士打道七號入境事務大樓 48 樓
48/F, Immigration Tower, 7 Gloucester Road, Wan Chai, Hong Kong

ACME SANITARY WARE CO. LTD. 2388 7171

本署檔號 Our ref. : ( WSD 3 23 T/J(791/2023)
來函檔號 Your ref. :
電話 Tel. :
傳真 Fax. : 2824 0578

31 August 2023



**Approval of "GROHE" Basin Mixer**
**(General Acceptance No. C20230650)**

Your E-Application [file-id: ETJ-GA-20230808-93] dated 9 August 2023 refer.

Having considered the test report ref. 222320PC230050 issued on 31 July 2023 by Fugro Technical Services Ltd., this Authority accepts that the fitting described below complies with, and its use when correctly installed does not contravene, the Waterworks Ordinance and Regulations.

| | |
|---|---|
| **Name of Manufacturer:** | Grohe AG |
| **Country of Origin:** | Thailand |
| **Brand:** | Grohe |
| **Details of Fitting:** | 3/8" Single lever basin mixer |
| **Model:** | 23751XXX<br>(where "XXX" denotes the code of colour) |
| **Body Markings:** | GROHE |
| **Expiry Date:** | 11 July 2028 |

This Authority hereby permits the use of the above fitting in fresh water plumbing systems subject to full adherence to Waterworks installation requirements. In particular, you are required to draw your customers' attention to the following requirement-

> "The cold water supply to the fitting shall be drawn from the same source that supplies the hot water apparatus so as to provide a balanced pressure and to obviate the risk of scalding in the event of a restriction or failure in the water supply."

A condition of this acceptance is that the fitting to be installed shall be replicas of the sample as certified by the testing agent mentioned above and without modifications. This acceptance may be withdrawn at any time if the standard of the fitting installed fails to meet that of the approved sample or if the fitting is found to be unsuitable for use in fresh water plumbing systems.

This acceptance is only applicable to the main body of the fitting, unless otherwise specified.

For the use of the fitting in any project, the General Acceptance Number of this letter must be quoted as a means of identification of acceptance of the fitting by this Authority.

Should you have any enquiries, please contact our Engineer Ms Winnie LO at tel. no. 3583 4086.

Yours faithfully,

(YAU Hau Yin)
for Director of Water Supplies

Encl.

c.c. WSD 3321/1/82 ] - without catalogue
ME/MC ] - with soft copy only